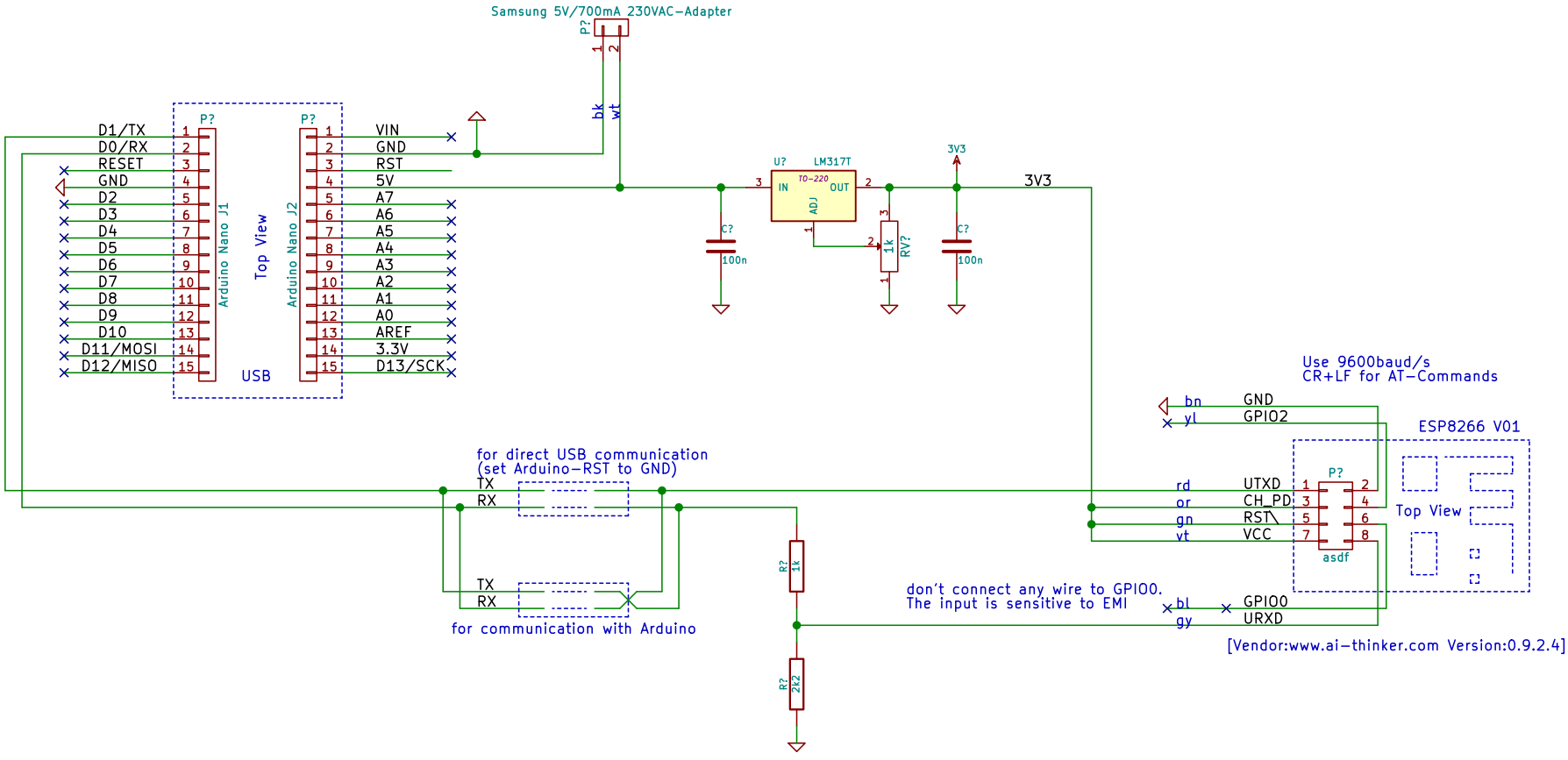

UL Color Codes:
http://site.ul.com/global/eng/pages/offerings/industries/chemicals/plastics/abbreviations/

www.zeilhofer.co.at
Mechatronik Karl Zeilhofer

Sheet: /
File: wifi-heating-controll.sch

Title: Schematic for testing the WiFi module with Arduino Nano

Size: A4	Date: 2014-12-02	**Rev: 1.0**
KiCad E.D.A. kicad (2014-08-05 BZR 5054)-product		Id: 1/1