EFC Based Precision-Weighing-Scale
(Range: 0-200g; Resolution: 10ug)

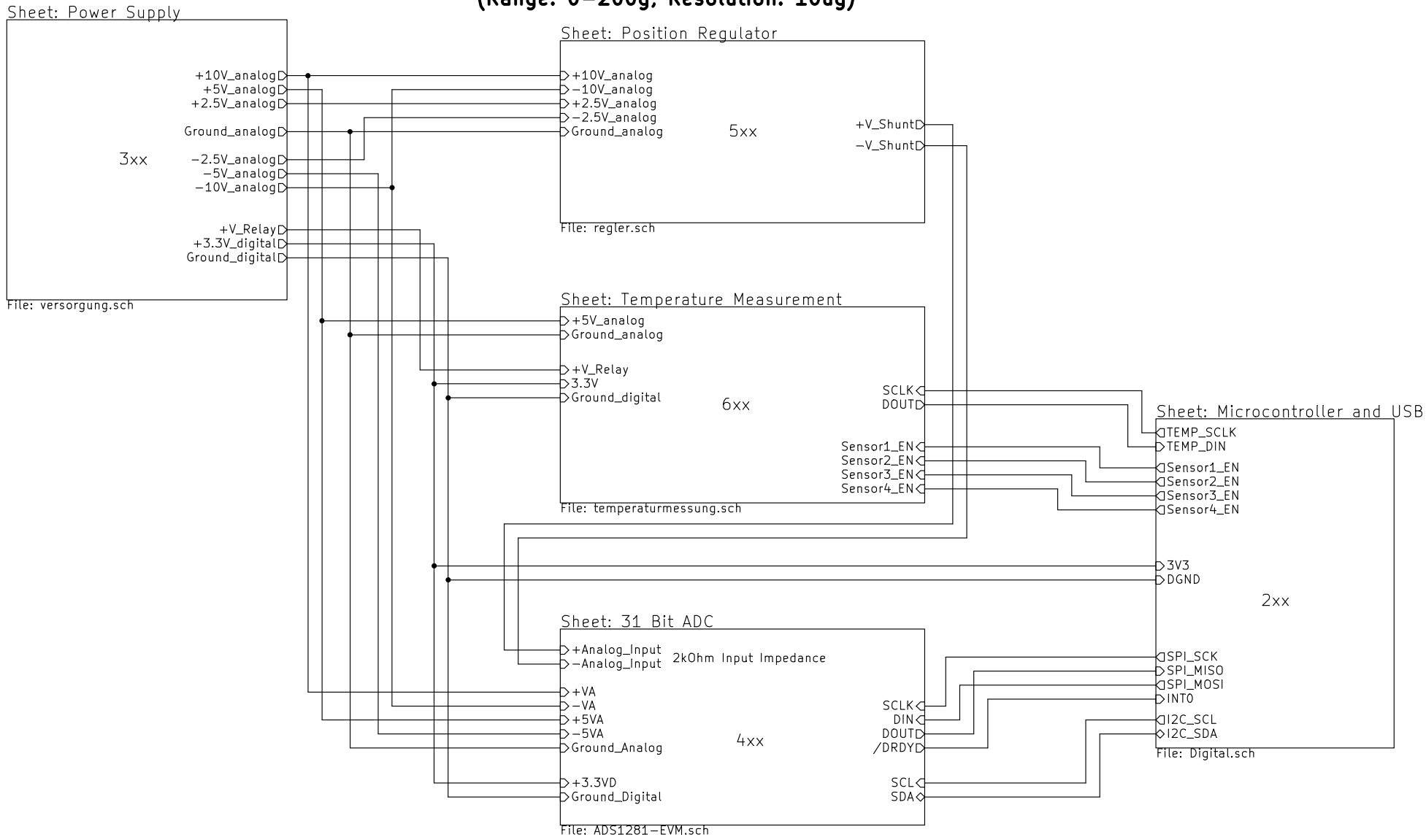

EMT - JKU Linz		
Birgit Pühringer, Friedrich Feichtinger, Karl Zeilhofer		
File: emk_waage.sch		
Sheet: /		
Title: EFC Based Precision-Weighing-Scale		
Size: A4	Date: 14 feb 2014	**Rev: 1.2.0**
KiCad E.D.A. eeschema (2011-12-28 BZR 3254)-stable		Id: 1/6

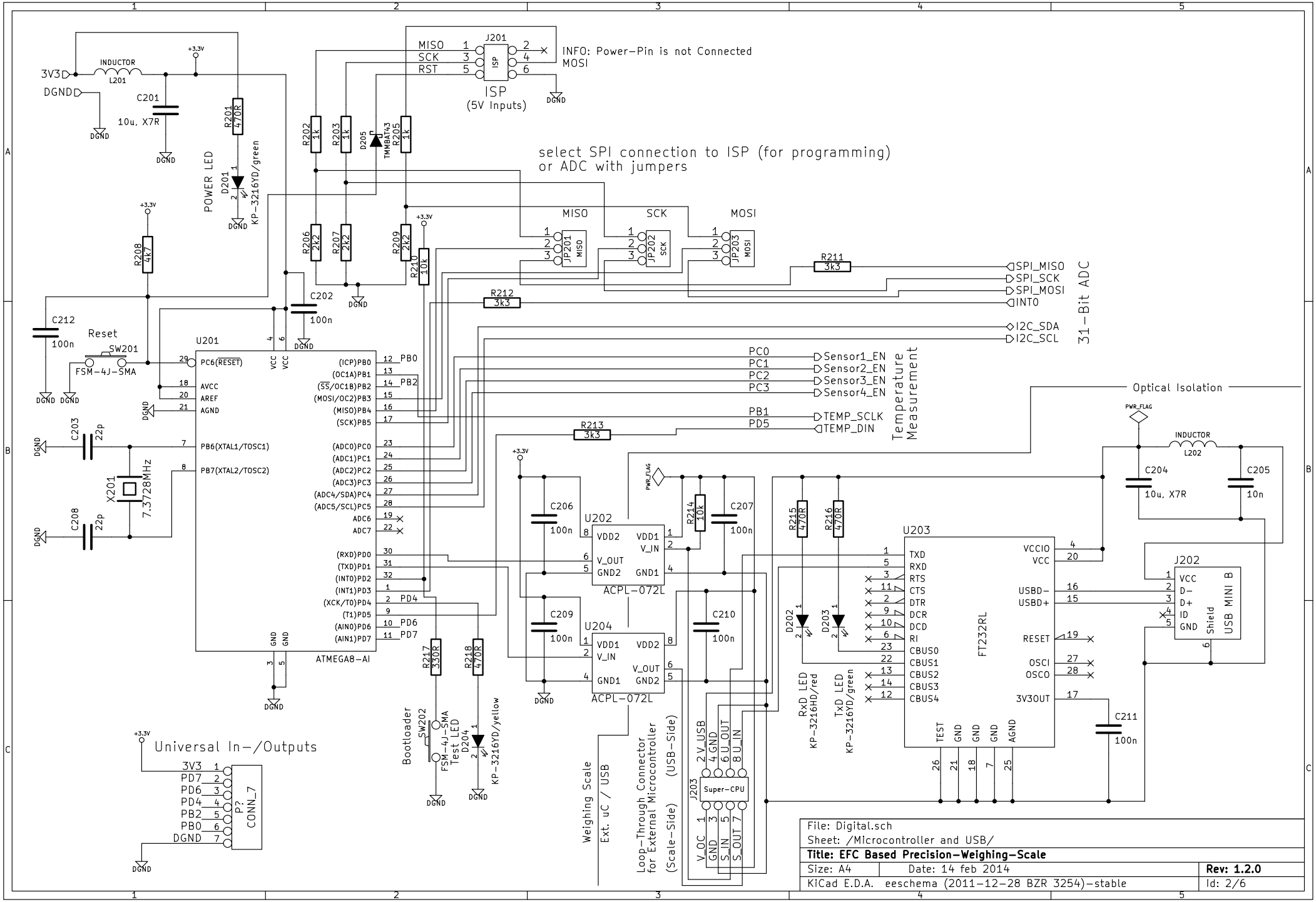
INFO: Power-Pin is not Connected
ISP
(5V Inputs)
select SPI connection to ISP (for programming)
or ADC with jumpers
POWER LED
Reset
ATMEGA8-AI
31-Bit ADC
Temperature Measurement
Optical Isolation
Universal In-/Outputs
Bootloader
Weighing Scale
Ext. uC / USB
Loop-Through Connector for External Microcontroller
(Scale-Side)
(USB-Side)
Super-CPU
FT232RL
ACPL-072L
RxD LED
TxD LED
Test LED
USB MINI B
File: Digital.sch
Sheet: /Microcontroller and USB/
Title: EFC Based Precision-Weighing-Scale
Size: A4
Date: 14 feb 2014
Rev: 1.2.0
KiCad E.D.A. eeschema (2011-12-28 BZR 3254)-stable
Id: 2/6

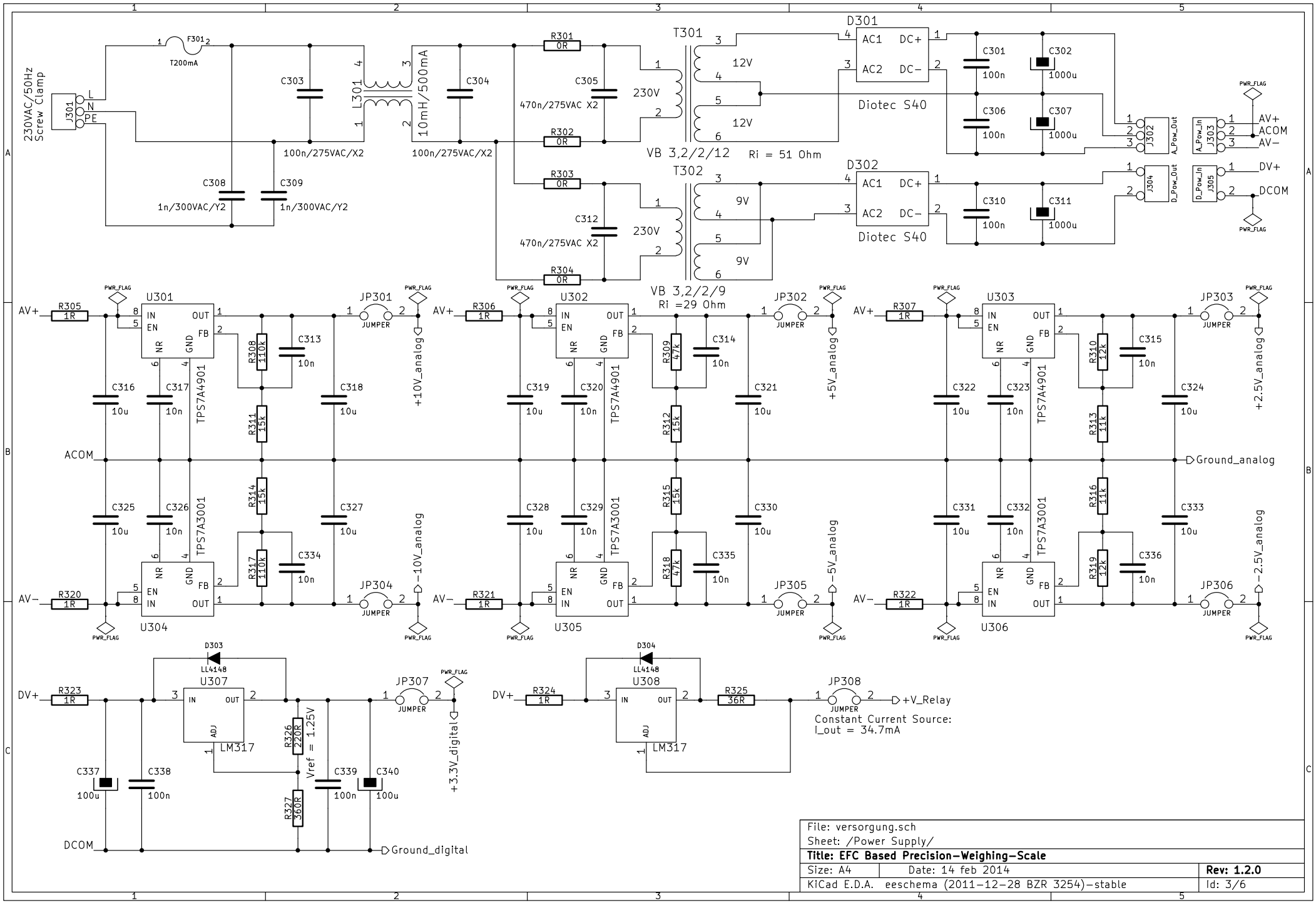

File: versorgung.sch		
Sheet: /Power Supply/		
Title: EFC Based Precision−Weighing−Scale		
Size: A4	Date: 14 feb 2014	**Rev: 1.2.0**
KiCad E.D.A. eeschema (2011−12−28 BZR 3254)−stable		Id: 3/6

Pin Headers of the Eval-Board ADS1281-EVM from Texas Instruments

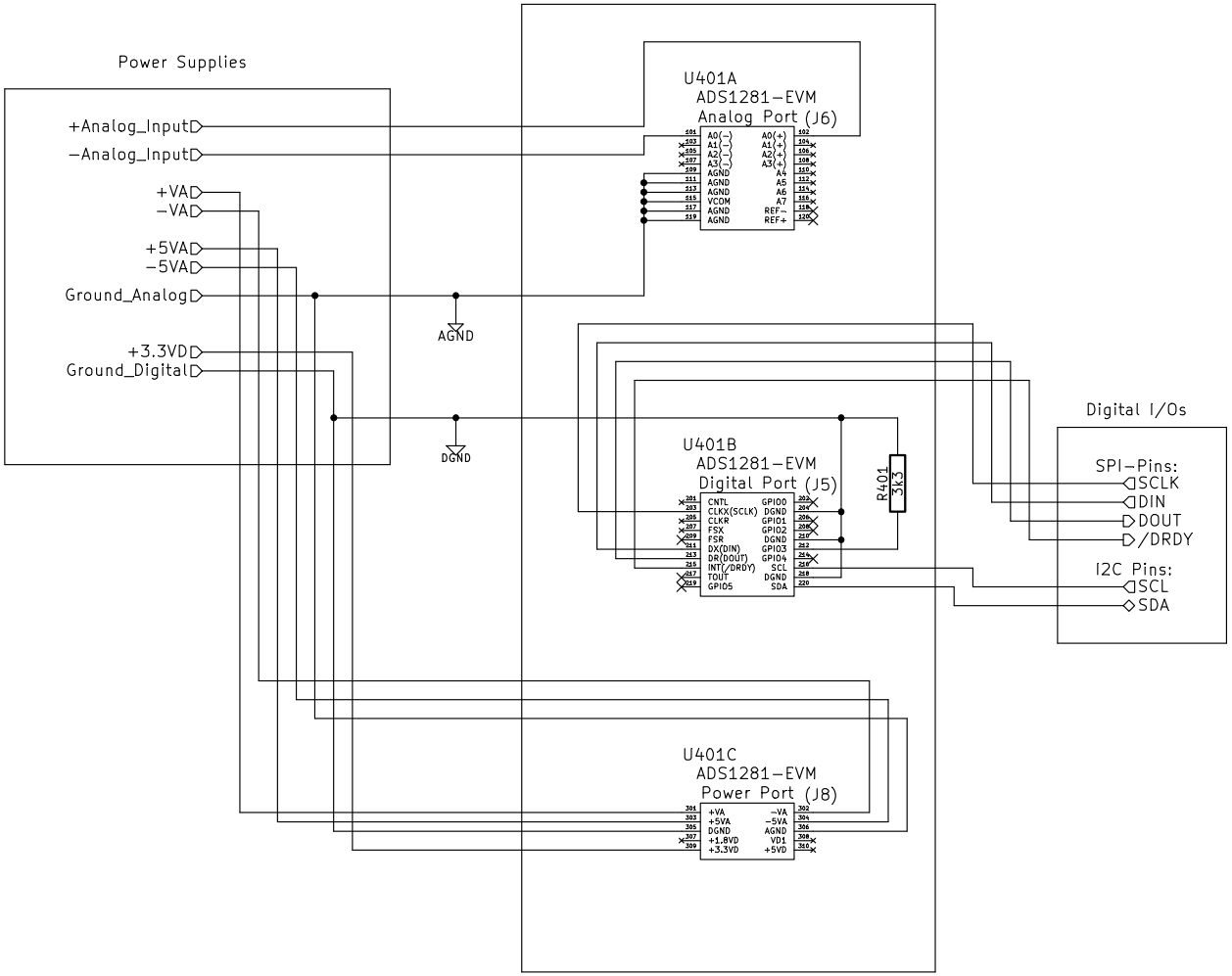

File: ADS1281-EVM.sch		
Sheet: /31 Bit ADC/		
Title: EFC Based Precision-Weighing-Scale		
Size: A4	Date: 14 feb 2014	**Rev: 1.2.0**
KiCad E.D.A. eeschema (2011-12-28 BZR 3254)-stable		Id: 4/6

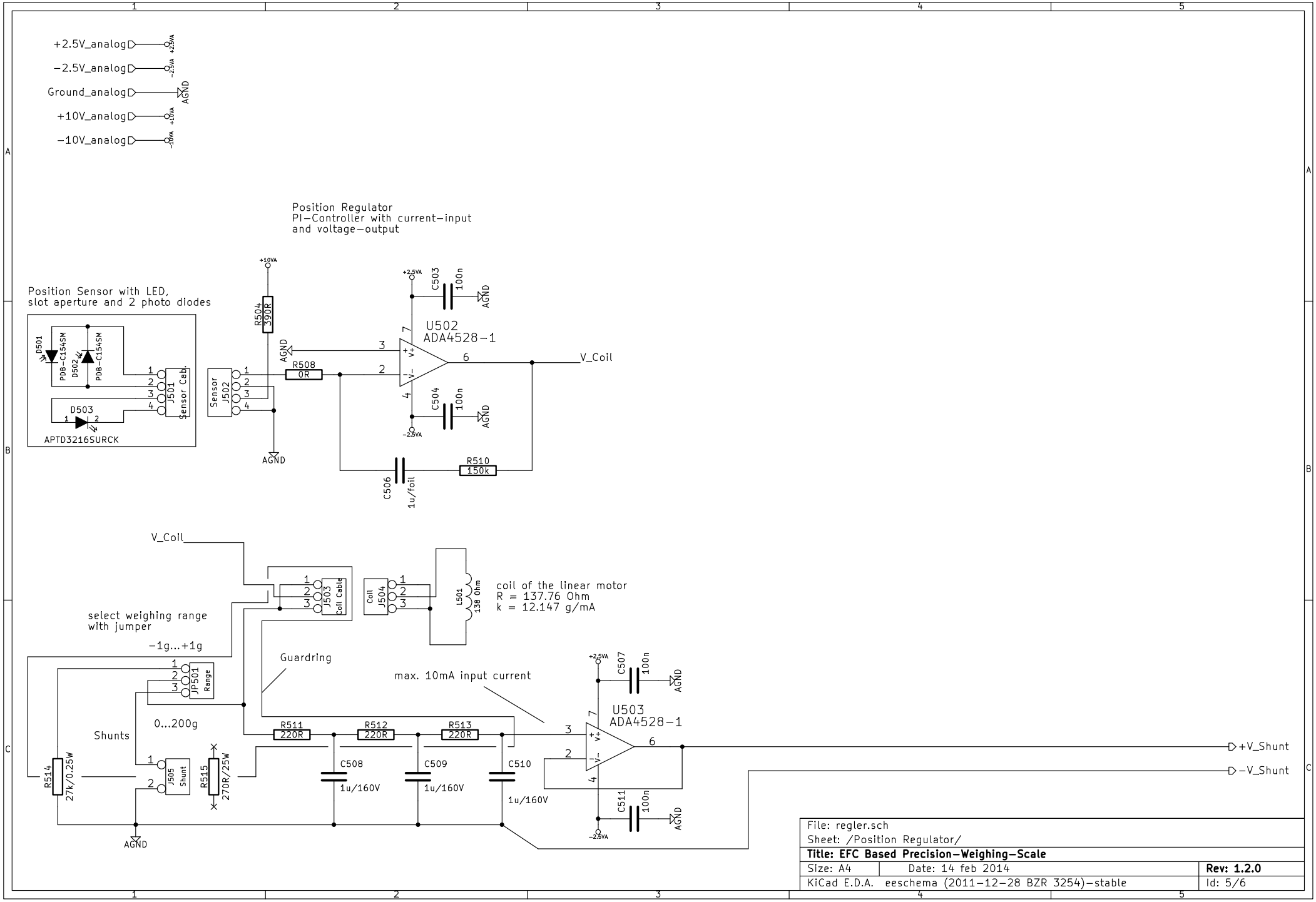

File: regler.sch		
Sheet: /Position Regulator/		
Title: EFC Based Precision−Weighing−Scale		
Size: A4	Date: 14 feb 2014	**Rev: 1.2.0**
KiCad E.D.A. eeschema (2011−12−28 BZR 3254)−stable		Id: 5/6

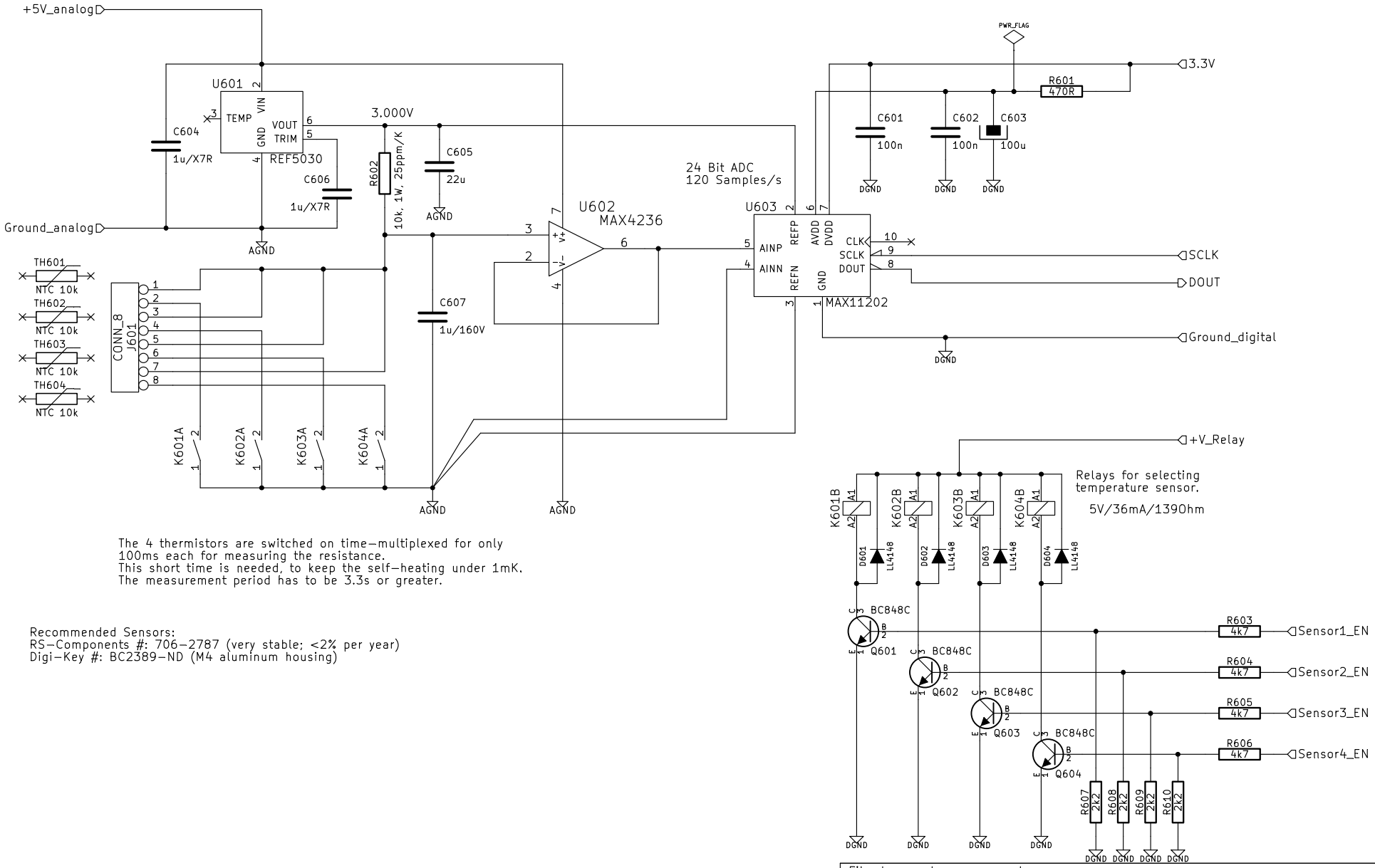

The 4 thermistors are switched on time-multiplexed for only 100ms each for measuring the resistance.
This short time is needed, to keep the self-heating under 1mK.
The measurement period has to be 3.3s or greater.

Recommended Sensors:
RS-Components #: 706-2787 (very stable; <2% per year)
Digi-Key #: BC2389-ND (M4 aluminum housing)

File: temperaturmessung.sch		
Sheet: /Temperature Measurement/		
Title: EFC Based Precision-Weighing-Scale		
Size: A4	Date: 14 feb 2014	**Rev: 1.2.0**
KiCad E.D.A. eeschema (2011-12-28 BZR 3254)-stable		Id: 6/6